ZANEEN®

BIONIQ ROUND ADJUSTABLE TRIMLESS

PROJECT	
TYPE	
SPECIFIER	
QUANTITY	
DATE	

A35527- ____ - ____ - ____

base number	Finishes (Diamond)	Ceiling Thickness	Reflector Options

1.To build a product code in our configurator select the specify button on the base model # product page
2. To build a manual product code on this datasheet choose from the options listed below in blue font and add the suffix to the base model #

GENERAL

Series: Bioniq
Subseries: Bioniq Round Adjustable
Brand: Prolicht
Division: Architectural
Mounting Type: Trimless
Mounting Location: Ceiling
Subcategory: Downlight

PHYSICAL

Shape: Round
Diameter (mm): 107
Diameter (in): 4 3/16
Height (mm): 112
Height (in): 4 7/16
Ceiling Thickness (mm): 10 / 12.5 / 15 / 25
Ceiling Thickness (in): 3/8 or 1/2 or 9/16 or 1
Min. Recessing Depth (mm): 130
Min. Recessing Depth (in): 5 1/8
Light Distribution: Adjustable / Downlight
Weight (kg): 0.583
Weight (lbs): 1.28
Fixture Finish: SSR / BKV / CWI / CRY / HAB / LAG / UFT / ITA / RUA / RUR / MIC / FTG / MYG / TWT / LOD / PUS / FRO / FUP / KIA / POP / BLS / SPG / MEY / GOH / GUM / CHC / COM / ABZ / JAG / OBR / MOS / ROR
Fixture Material: Aluminum Die Cast
Cut-out Measurements: Ø111mm/4 3/8"
Upon Request: Unique Ceiling Thickness

ELECTRICAL

Lamp Type: LED (Zhaga Standard)
Input Wattage (W): 16.5
Total Output Wattage (W): 14.7
Dimming: Dali Dimming
Driver Location: Recessed Housing
Driver Type: Constant Current - 120Vac
Driver Class: Class 2
Housing: See Components
Input Voltage (V): 120
Constant Current (MA): 350

LED

Number of LEDs: 1
Max. Delivered Lumen (lm): 770
Nominal Lumen (lm): 1140
CRI: >90 CRI
Lamp Life (hrs): 50000
Upon Request: RGB-W Tunable White Special Color Temperature Special LED

OPTICAL

Reflector°: 20 / 40 / 60
Adjustability: Rotational 355°; Tilt 30°
Upon Request: Special Beam Angles

RATINGS AND CERTIFICATIONS

Certified By: Certified for North American Standards
IP rating: IP20

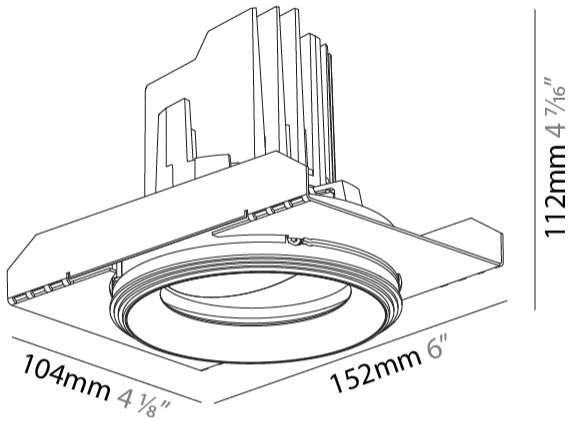

Ø 107mm 4 3/16"

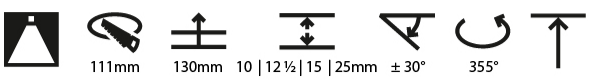

A

Zaneen Group Inc. © 2024, T 1800-388-3382, F 416-247-9319, www.zaneen.com
Available for International specifications by adding 'INT' at the end of the existing Model #. For assistance on 'custom' specifications, contact zteam@zaneen.com.
In a constant effort to supply the best product, we reserve the right to change specifications or materials without notice. The most recent specification sheets are found at zaneen.com

June 3, 2024, 4:34 pm

ZANEEN®

PROJECT	
TYPE	
SPECIFIER	
QUANTITY	
DATE	

BIONIQ ROUND ADJUSTABLE TRIMLESS

A35527-

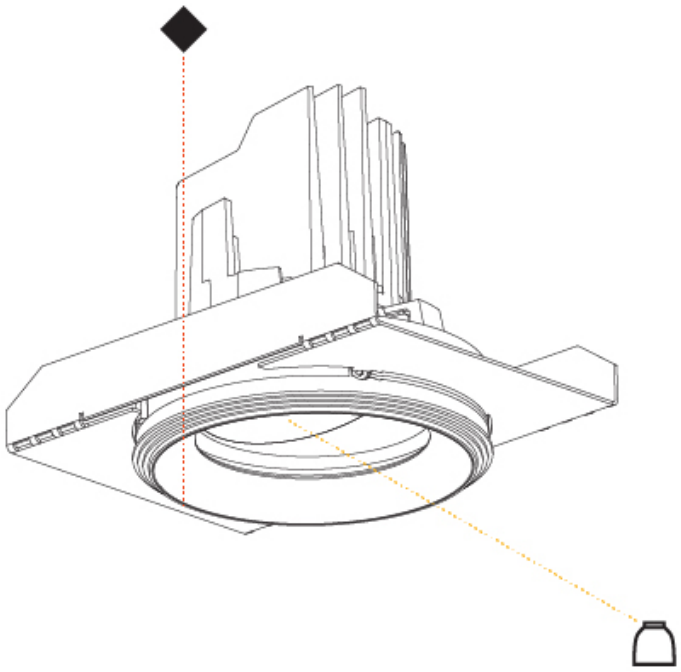

A

Zaneen Group Inc. © 2024, T 1800-388-3382, F 416-247-9319, www.zaneen.com

Available for International specifications by adding 'INT' at the end of the existing Model #. For assistance on 'custom' specifications, contact zteam@zaneen.com.
In a constant effort to supply the best product, we reserve the right to change specifications or materials without notice. The most recent specification sheets are found at zaneen.com

ZANEEN®

PROJECT	
TYPE	
SPECIFIER	
QUANTITY	
DATE	

BIONIQ ROUND SEMI ADJUSTABLE TRIMLESS

A35528- _____ - _____ - _____ - _____

base number	Finishes (Diamond)	Ceiling Thickness	Reflector Options	Lens Options

1.To build a product code in our configurator select the specify button on the base model # product page
2. To build a manual product code on this datasheet choose from the options listed below in blue font and add the suffix to the base model #

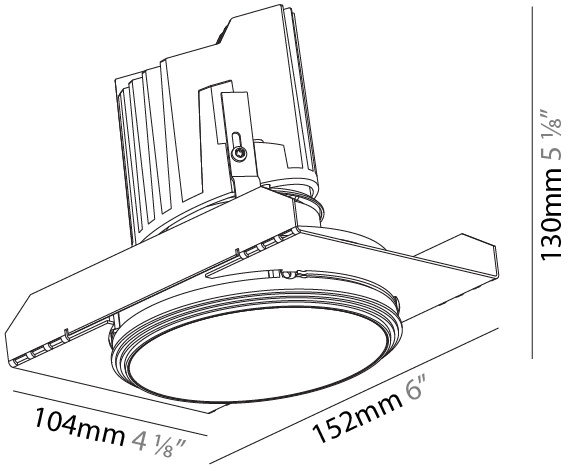

Ø 107mm 4 3/16"

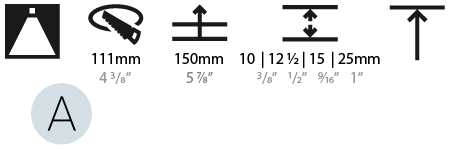

GENERAL

Series: Bioniq
Subseries: Bioniq Round Semi Adjustable
Brand: Prolicht
Division: Architectural
Mounting Type: Trimless
Mounting Location: Ceiling
Subcategory: Downlight

PHYSICAL

Shape: Round
Diameter (mm): 107
Diameter (in): 4 3/16
Height (mm): 130
Height (in): 5 1/8
Ceiling Thickness (mm): 10 / 12.5 / 15 / 25
Ceiling Thickness (in): 3/8 or 1/2 or 9/16 or 1
Min. Recessing Depth (mm): 150
Min. Recessing Depth (in): 5 7/8
Light Distribution: Downlight
Weight (kg): 0.646
Weight (lbs): 1.42
Fixture Finish: SSR / BKV / CWI / CRY / HAB / LAG / UFT / ITA / RUA / RUR / MIC / FTG / MYG / TWT / LOD / PUS / FRO / FUP / KIA / POP / BLS / SPG / MEY / GOH / GUM / CHC / COM / ABZ / JAG / OBR / MOS / ROR
Fixture Material: Aluminum Die Cast
Cut-out Measurements: Ø 111mm / 4 3/8"
Upon Request: Unique Ceiling Thickness

ELECTRICAL

Lamp Type: LED (Zhaga Standard)
Input Wattage (W): 15
Total Output Wattage (W): 14.7
Dimming: Dali Dimming
Driver Included: No
Driver Location: Recessed Housing
Driver Type: Constant Current - 120Vac
Driver Class: Class 2
Housing: See components
Input Voltage (V): 120
Constant Current (MA): 350

LED

Number of LEDs: 1
Color Temperature (°K): Warm Dim
Max. Delivered Lumen (lm): 766
Nominal Lumen (lm): 1140
CRI: >90 CRI
Lamp Life (hrs): 50000
Upon Request: RGB-W Tunable White Special Color Temperature Special LED

OPTICAL

Reflector°: 18 / 42 / 60
Optic°: Lens Pack - No Lens / Linear Spread Lens / Honeycomb / Spread Lens
Upon Request: Special Beam Angles

RATINGS AND CERTIFICATIONS

Certified By: Certified for North American Standards
IP rating: IP20

Zaneen Group Inc. © 2024, T 1800-388-3382, F 416-247-9319, www.zaneen.com
Available for international specifications by adding 'INT' at the end of the existing Model #. For assistance on 'custom' specifications, contact zteam@zaneen.com.
In a constant effort to supply the best product, we reserve the right to change specifications or materials without notice. The most recent specification sheets are found at zaneen.com

June 3, 2024, 4:34 pm

ZANEEN®

PROJECT	
TYPE	
SPECIFIER	
QUANTITY	
DATE	

BIONIQ ROUND SEMI ADJUSTABLE TRIMLESS

A35528-

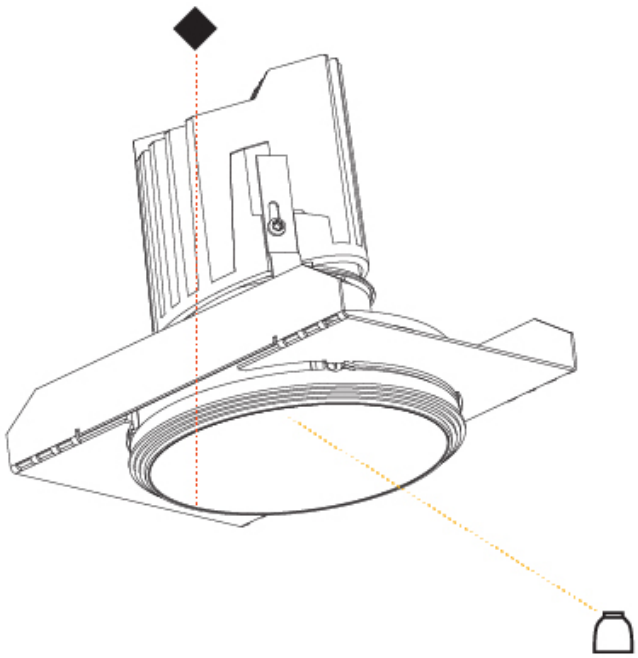

A

Zaneen Group Inc. © 2024, T 1800-388-3382, F 416-247-9319, www.zaneen.com

Available for International specifications by adding 'INT' at the end of the existing Model #. For assistance on 'custom' specifications, contact zteam@zaneen.com.
In a constant effort to supply the best product, we reserve the right to change specifications or materials without notice. The most recent specification sheets are found at zaneen.com

ZANEEN®

PROJECT	
TYPE	
SPECIFIER	
QUANTITY	
DATE	

BIONIQ ROUND SEMI ADJUSTABLE TRIMLESS

A35529- _____ - _____ - _____

base number | Finishes (Diamond) | Ceiling Thickness | Reflector Options

1.To build a product code in our configurator select the specify button on the base model # product page
2. To build a manual product code on this datasheet choose from the options listed below in blue font and add the suffix to the base model #

GENERAL

Series: Bioniq
Subseries: Bioniq Round Semi Adjustable
Brand: Prolicht
Division: Architectural
Mounting Type: Trimless
Mounting Location: Ceiling
Subcategory: Downlight

PHYSICAL

Shape: Round
Diameter (mm): 107
Diameter (in): 4 3/16
Height (mm): 112
Height (in): 4 7/16
Ceiling Thickness (mm): 10 / 12.5 / 15 / 25
Ceiling Thickness (in): 3/8 or 1/2 or 9/16 or 1
Min. Recessing Depth (mm): 130
Min. Recessing Depth (in): 5 1/8
Light Distribution: Adjustable / Downlight
Weight (kg): 0.609
Weight (lbs): 1.34
Fixture Finish: SSR / BKV / CWI / CRY / HAB / LAG / UFT / ITA / RUA / RUR / MIC / FTG / MYG / TWT / LOD / PUS / FRO / FUP / KIA / POP / BLS / SPG / MEY / GOH / GUM / CHC / COM / ABZ / JAG / OBR / MOS / ROR
Fixture Material: Aluminum Die Cast
Cut-out Measurements: ⌀ 111mm / 4 3/8"
Upon Request: Unique Ceiling Thickness

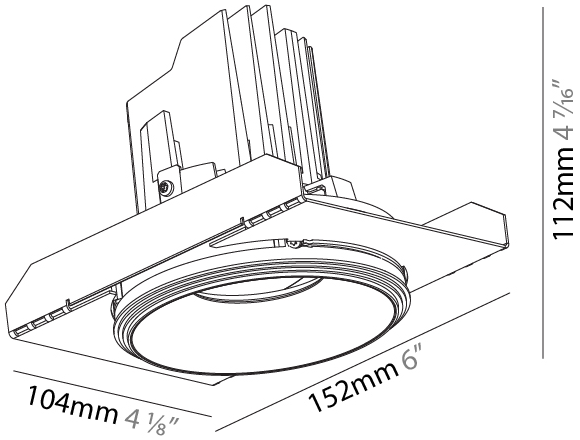

Ø 107mm 4 3/16"

ELECTRICAL

Lamp Type: LED (Zhaga Standard)
Input Wattage (W): 16.5
Total Output Wattage (W): 14.7
Dimming: Dali Dimming
Driver Included: No
Driver Location: Recessed Housing
Driver Type: Constant Current - 120Vac
Driver Class: Class 2
Housing: See Components
Input Voltage (V): 120
Constant Current (MA): 350

LED

Number of LEDs: 1
Max. Delivered Lumen (lm): 770
Nominal Lumen (lm): 1140
CRI: >90 CRI
Lamp Life (hrs): 50000
Upon Request: RGB-W Tunable White Special Color Temperature Special LED

OPTICAL

Reflector°: 20 / 40 / 60
Adjustability: Rotational 355°; Tilt 10°
Upon Request: Special Beam Angles

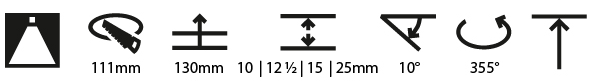

A

RATINGS AND CERTIFICATIONS

Certified By: Certified for North American Standards
IP rating: IP20

Zaneen Group Inc. © 2024, T 1800-388-3382, F 416-247-9319, www.zaneen.com
Available for International specifications by adding 'INT' at the end of the existing Model #. For assistance on 'custom' specifications, contact zteam@zaneen.com.
In a constant effort to supply the best product, we reserve the right to change specifications or materials without notice. The most recent specification sheets are found at zaneen.com

June 3, 2024, 4:34 pm

ZANEEN®

BIONIQ ROUND SEMI ADJUSTABLE TRIMLESS

PROJECT	
TYPE	
SPECIFIER	
QUANTITY	
DATE	

A35529-

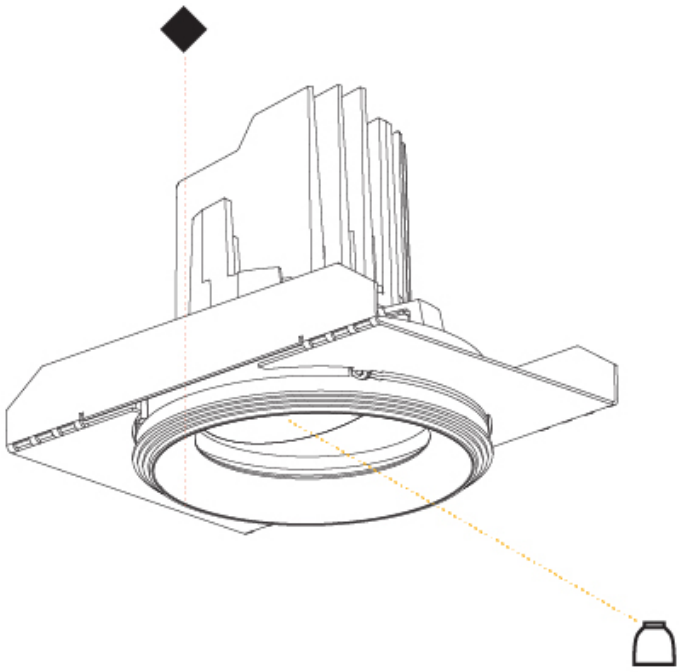

A

Zaneen Group Inc. © 2024, T 1800-388-3382, F 416-247-9319, www.zaneen.com

Available for International specifications by adding 'INT' at the end of the existing Model #. For assistance on 'custom' specifications, contact zteam@zaneen.com.
In a constant effort to supply the best product, we reserve the right to change specifications or materials without notice. The most recent specification sheets are found at zaneen.com

ZANEEN®

PROJECT	
TYPE	
SPECIFIER	
QUANTITY	
DATE	

BIONIQ SQUARE ADJUSTABLE TRIMLESS

A35530- _____ - _____ - _____ - _____

base number | Finishes (Diamond) | Finishes (Triangle) | Ceiling Thickness | Reflector Options

1.To build a product code in our configurator select the specify button on the base model # product page
2. To build a manual product code on this datasheet choose from the options listed below in blue font and add the suffix to the base model #

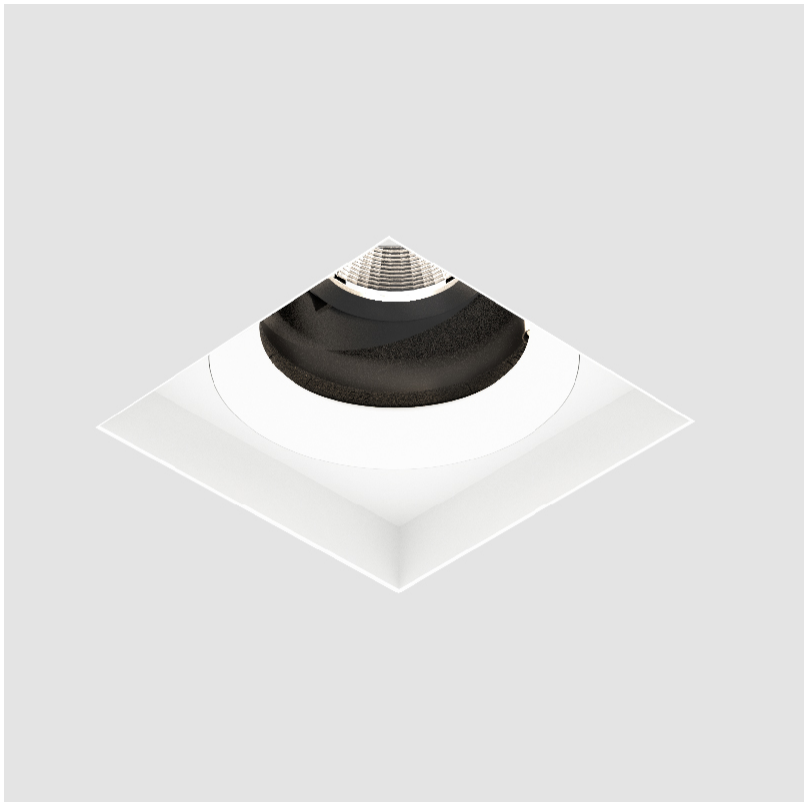

GENERAL

Series: Bioniq
Subseries: Bioniq Square Adjustable
Brand: Prolicht
Division: Architectural
Mounting Type: Trimless
Mounting Location: Ceiling
Subcategory: Downlight

PHYSICAL

Shape: Square
Length (mm): 106
Length (in): 4 3/16
Width (mm): 106
Width (in): 4 3/16
Height (mm): 134
Height (in): 5 1/4
Ceiling Thickness (mm): 10 / 12.5 / 15 / 25
Ceiling Thickness (in): 3/8 or 1/2 or 9/16 or 1
Min. Recessing Depth (mm): 150
Min. Recessing Depth (in): 5 7/8
Light Distribution: Adjustable / Downlight
Weight (kg): 0.64
Weight (lbs): 1.41
Fixture Finish: SSR / BKV / CWI / CRY / HAB / LAG / UFT / ITA / RUA / RUR / MIC / FTG / MYG / TWT / LOD / PUS / FRO / FUP / KIA / POP / BLS / SPG / MEY / GOH / GUM / CHC / COM / ABZ / JAG / OBR / MOS / ROR
Fixture Material: Aluminum Die Cast
Cut-out Measurements: 120mm / 4 3/4" x 120mm / 4 3/4"
Upon Request: Unique Ceiling Thickness

ELECTRICAL

Lamp Type: LED (Zhaga Standard)
Input Wattage (W): 16.5
Total Output Wattage (W): 14.7
Dimming: Dali Dimming
Driver Included: No
Driver Location: Recessed Housing
Driver Type: Constant Current - 120Vac
Driver Class: Class 2
Housing: See Components
Input Voltage (V): 120
Constant Current (MA): 350

LED

Number of LEDs: 1
Max. Delivered Lumen (lm): 770
Nominal Lumen (lm): 1140
CRI: >90 CRI
Lamp Life (hrs): 50000
Upon Request: RGB-W Tunable White Special Color Temperature Special LED

OPTICAL

Reflector°: 20 / 40 / 60
Adjustability: Rotational 355°; Tilt 30°
Upon Request: Special Beam Angles

RATINGS AND CERTIFICATIONS

Certified By: Certified for North American Standards
IP rating: IP20

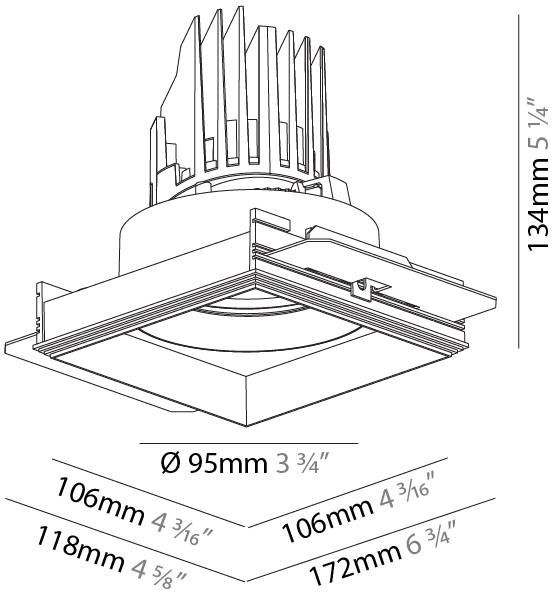

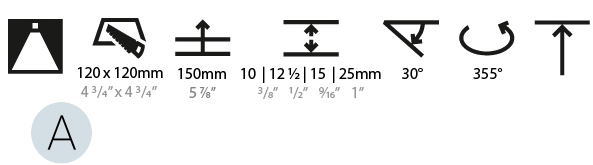

Zaneen Group Inc. © 2024, T 1800-388-3382, F 416-247-9319, www.zaneen.com
Available for international specifications by adding 'INT' at the end of the existing Model #. For assistance on 'custom' specifications, contact zteam@zaneen.com.
In a constant effort to supply the best product, we reserve the right to change specifications or materials without notice. The most recent specification sheets are found at zaneen.com

ZANEEN®

PROJECT	
TYPE	
SPECIFIER	
QUANTITY	
DATE	

BIONIQ SQUARE ADJUSTABLE TRIMLESS

A35530-

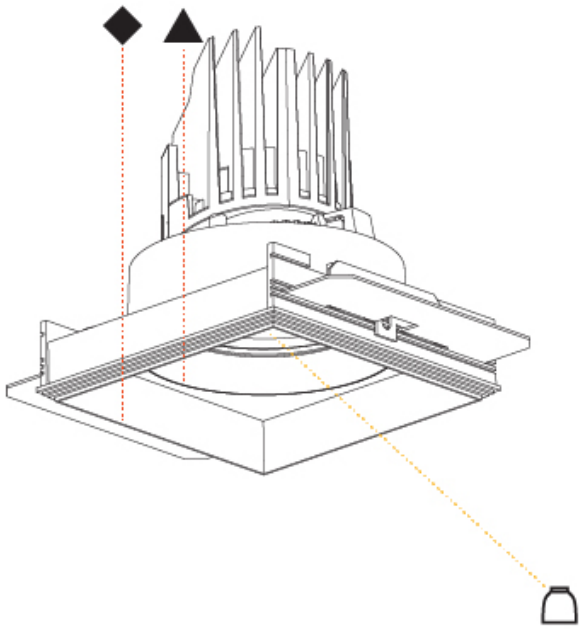

A

Zaneen Group Inc. © 2024, T 1800-388-3382, F 416-247-9319, www.zaneen.com

Available for International specifications by adding 'INT' at the end of the existing Model #. For assistance on 'custom' specifications, contact zteam@zaneen.com.
In a constant effort to supply the best product, we reserve the right to change specifications or materials without notice. The most recent specification sheets are found at zaneen.com

ZANEEN®

PROJECT	
TYPE	
SPECIFIER	
QUANTITY	
DATE	

BIONIQ SQUARE ADJUSTABLE COMFORT
TRIMLESS

A35531- _____ - _____ - _____ - _____ - _____

base number | Finishes (Diamond) | Finishes (Triangle) | Finishes (Circle) | Ceiling Thickness | Reflector Options

1.To build a product code in our configurator select the specify button on the base model # product page
2. To build a manual product code on this datasheet choose from the options listed below in blue font and add the suffix to the base model #

GENERAL
Series: Bioniq
Subseries: Bioniq Square Adjustable Comfort
Brand: Prolicht
Division: Architectural
Mounting Type: Trimless
Mounting Location: Ceiling
Subcategory: Downlight

PHYSICAL
Shape: Square
Length (mm): 106
Length (in): 4 3/16
Width (mm): 106
Width (in): 4 3/16
Height (mm): 134
Height (in): 5 1/4
Ceiling Thickness (mm): 10 / 12.5 / 15 / 25
Ceiling Thickness (in): 3/8 or 1/2 or 9/16 or 1
Min. Recessing Depth (mm): 150
Min. Recessing Depth (in): 5 7/8
Light Distribution: Adjustable / Downlight
Weight (kg): 0.704
Weight (lbs): 1.55
Fixture Finish: SSR / BKV / CWI / CRY / HAB / LAG / UFT / ITA / RUA / RUR / MIC / FTG / MYG / TWT / LOD / PUS / FRO / FUP / KIA / POP / BLS / SPG / MEY / GOH / GUM / CHC / COM / ABZ / JAG / OBR / MOS / ROR
Fixture Material: Aluminum Die Cast
Cut-out Measurements: 120mm / 4 3/4" x 120mm / 4 3/4"
Upon Request: Unique Ceiling Thickness

ELECTRICAL
Lamp Type: LED (Zhaga Standard)
Input Wattage (W): 16.5
Total Output Wattage (W): 14.7
Dimming: Dali Dimming
Driver Included: No
Driver Location: Recessed Housing
Driver Type: Constant Current - 120Vac
Driver Class: Class 2
Housing: See Components
Input Voltage (V): 120
Constant Current (MA): 350

LED
Number of LEDs: 1
Max. Delivered Lumen (lm): 770
Nominal Lumen (lm): 1140
CRI: >90 CRI
Lamp Life (hrs): 50000
Upon Request: RGB-W Tunable White Special Color Temperature Special LED

OPTICAL
Reflector°: 20 / 40 / 60
Adjustability: Rotational 355°; Tilt 30°
Upon Request: Special Beam Angles

RATINGS AND CERTIFICATIONS
Certified By: Certified for North American Standards
IP rating: IP20

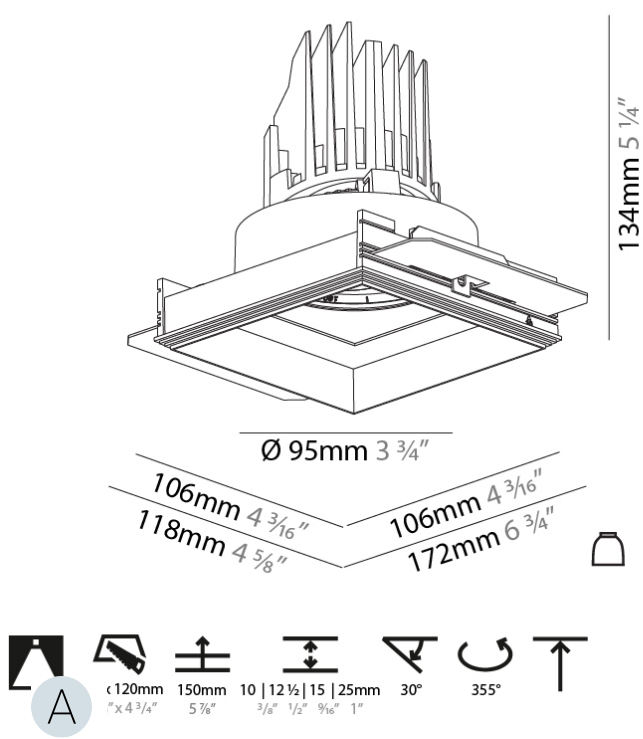

Zaneen Lumen Inc. 8-2024 - 1-800-388-3382, F 416-247-9319, www.zaneen.com
Available for International specifications by adding 'INT' at the end of the existing Model #. For assistance on 'custom' specifications, contact zteam@zaneen.com.
In a constant effort to supply the best product, we reserve the right to change specifications or materials without notice. The most recent specification sheets are found at zaneen.com

ZANEEN®

PROJECT	
TYPE	
SPECIFIER	
QUANTITY	
DATE	

BIONIQ SQUARE ADJUSTABLE COMFORT

TRIMLESS

A35531-

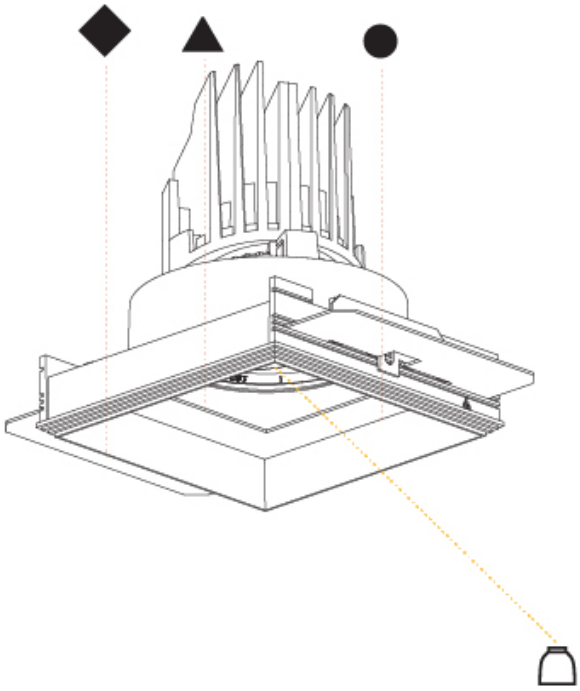

A

Zaneen Group Inc. © 2024, T 1800-388-3382, F 416-247-9319, www.zaneen.com

Available for International specifications by adding 'INT' at the end of the existing Model #. For assistance on 'custom' specifications, contact zteam@zaneen.com.
In a constant effort to supply the best product, we reserve the right to change specifications or materials without notice. The most recent specification sheets are found at zaneen.com

ZANEEN®

BIONIQ SQUARE DEEP TRIMLESS

PROJECT	
TYPE	
SPECIFIER	
QUANTITY	
DATE	

A35532- _____ - _____ - _____ - _____

base number | Finishes (Diamond) | Finishes (Triangle) | Ceiling Thickness | Reflector Options

1.To build a product code in our configurator select the specify button on the base model # product page
2. To build a manual product code on this datasheet choose from the options listed below in blue font and add the suffix to the base model #

GENERAL

Series: Bioniq
Subseries: Bioniq Square Deep
Brand: Prolicht
Division: Architectural
Mounting Type: Trimless
Mounting Location: Ceiling
Subcategory: Downlight

PHYSICAL

Diameter (mm): 95
Diameter (in): 3 3/4
Length (mm): 106
Length (in): 4 3/16
Width (mm): 106
Width (in): 4 3/16
Height (mm): 150
Height (in): 5 7/8
Ceiling Thickness (mm): 10 / 12.5 / 15 / 25
Ceiling Thickness (in): 3/8 or 1/2 or 9/16 or 1
Min. Recessing Depth (mm): 170
Min. Recessing Depth (in): 6 11/16
Light Distribution: Downlight
Weight (kg): 0.688
Weight (lbs): 1.52
Fixture Finish: SSR / BKV / CWI / CRY / HAB / LAG / UFT / ITA / RUA / RUR / MIC / FTG / MYG / TWT / LOD / PUS / FRO / FUP / KIA / POP / BLS / SPG / MEY / GOH / GUM / CHC / COM / ABZ / JAG / OBR / MOS / ROR
Fixture Material: Aluminum Die Cast
Cut-out Measurements: 120mm / 4 3/4" x 120mm / 4 3/4"
Upon Request: Unique Ceiling Thickness

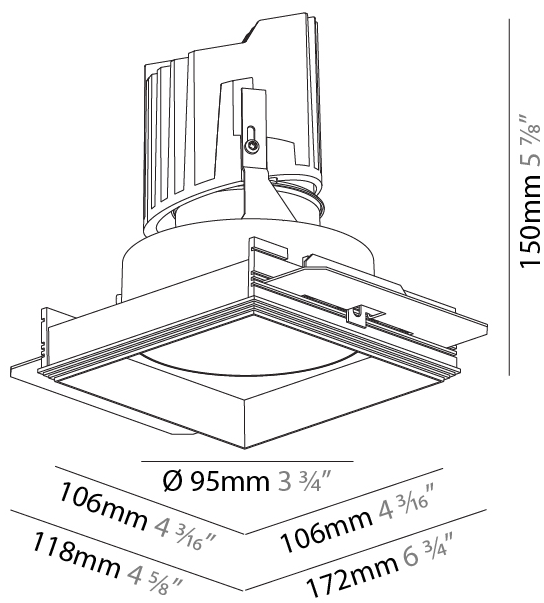

ELECTRICAL

Lamp Type: LED (Zhaga Standard)
Input Wattage (W): 16.5
Total Output Wattage (W): 14.7
Dimming: Dali Dimming
Driver Included: No
Driver Location: Recessed Housing
Driver Type: Constant Current - 120Vac
Driver Class: Class 2
Housing: See Components
Input Voltage (V): 120
Constant Current (MA): 350

LED

Number of LEDs: 1
Color Temperature (°K): Warm Dim
Max. Delivered Lumen (lm): 770
Nominal Lumen (lm): 1140
CRI: >90 CRI
Lamp Life (hrs): 50000
Upon Request: RGB-W Tunable White Special Color Temperature Special LED

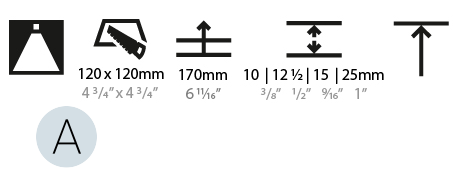

OPTICAL

Reflector°: 20 / 40 / 60
Upon Request: Special Beam Angles

RATINGS AND CERTIFICATIONS

Certified By: Certified for North American Standards
IP rating: IP20

Zaneen Group Inc. © 2024, T 1800-988-3382, F 416-247-9319, www.zaneen.com
Available to International specifications by adding 'INT' at the end of the existing Model #. For assistance on 'custom' specifications, contact zteam@zaneen.com.
In a constant effort to supply the best product, we reserve the right to change specifications or materials without notice. The most recent specification sheets are found at zaneen.com

ZANEEN®

PROJECT	
TYPE	
SPECIFIER	
QUANTITY	
DATE	

BIONIQ SQUARE DEEP TRIMLESS

A35532-

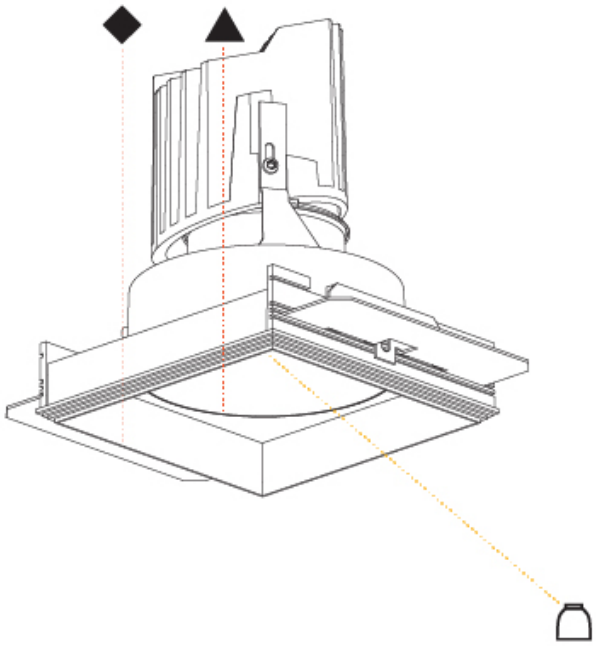

A

Zaneen Group Inc. © 2024, T 1800-388-3382, F 416-247-9319, www.zaneen.com

Available for International specifications by adding 'INT' at the end of the existing Model #. For assistance on 'custom' specifications, contact zteam@zaneen.com.
In a constant effort to supply the best product, we reserve the right to change specifications or materials without notice. The most recent specification sheets are found at zaneen.com

ZANEEN®

PROJECT	
TYPE	
SPECIFIER	
QUANTITY	
DATE	

BIONIQ SQUARE DEEP COMFORT TRIMLESS

A35533- _____ - _____ - _____ - _____

base number	Finishes (Diamond)	Finishes (Triangle)	Ceiling Thickness	Reflector Options

1.To build a product code in our configurator select the specify button on the base model # product page
2. To build a manual product code on this datasheet choose from the options listed below in blue font and add the suffix to the base model #

GENERAL

Series: Bioniq
Subseries: Bioniq Square Deep Comfort
Brand: Prolicht
Division: Architectural
Mounting Type: Trimless
Mounting Location: Ceiling
Subcategory: Downlight

PHYSICAL

Shape: Square
Length (mm): 106
Length (in): 4 3/16
Width (mm): 106
Width (in): 4 3/16
Height (mm): 150
Height (in): 5 7/8
Ceiling Thickness (mm): 10 / 12.5 / 15 / 25
Ceiling Thickness (in): 3/8 or 1/2 or 9/16 or 1
Min. Recessing Depth (mm): 170
Min. Recessing Depth (in): 6 11/16
Light Distribution: Downlight
Weight (kg): 0.769
Weight (lbs): 1.69
Fixture Finish: SSR / BKV / CWI / CRY / HAB / LAG / UFT / ITA / RUA / RUR / MIC / FTG / MYG / TWT / LOD / PUS / FRO / FUP / KIA / POP / BLS / SPG / MEY / GOH / GUM / CHC / COM / ABZ / JAG / OBR / MOS / ROR
Fixture Material: Aluminum Die Cast
Cut-out Measurements: 120mm / 4 3/4" x 120mm / 4 3/4"
Upon Request: Unique Ceiling Thickness

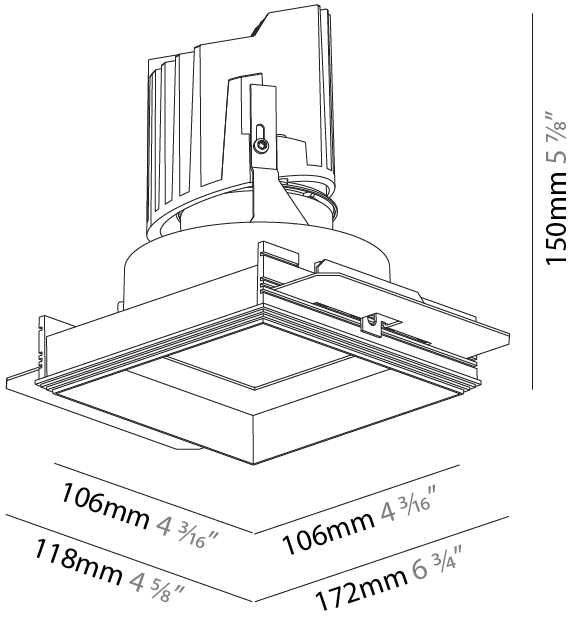

ELECTRICAL

Lamp Type: LED (Zhaga Standard)
Input Wattage (W): 16.5
Total Output Wattage (W): 14.7
Dimming: Dali Dimming
Driver Included: No
Driver Location: Recessed Housing
Driver Type: Constant Current - 120Vac
Driver Class: Class 2
Housing: See Components
Input Voltage (V): 120
Constant Current (MA): 350

LED

Number of LEDs: 1
Max. Delivered Lumen (lm): 770
Nominal Lumen (lm): 1140
CRI: >90 CRI
Lamp Life (hrs): 50000
Upon Request: RGB-W Tunable White Special Color Temperature Special LED

OPTICAL

Reflector°: 20 / 40 / 60
Upon Request: Special Beam Angles

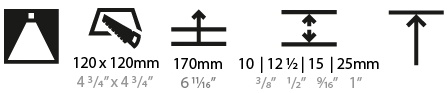

A

RATINGS AND CERTIFICATIONS

Certified By: Certified for North American Standards
IP rating: IP20

Zaneen Group Inc. © 2024, T 1800-388-3382, F 416-247-9319, www.zaneen.com
Available for International specifications by adding 'INT' at the end of the existing Model #. For assistance on 'custom' specifications, contact zteam@zaneen.com.
In a constant effort to supply the best product, we reserve the right to change specifications or materials without notice. The most recent specification sheets are found at zaneen.com

June 3, 2024, 4:34 pm

ZANEEN®

PROJECT	
TYPE	
SPECIFIER	
QUANTITY	
DATE	

BIONIQ SQUARE DEEP COMFORT TRIMLESS

A35533-

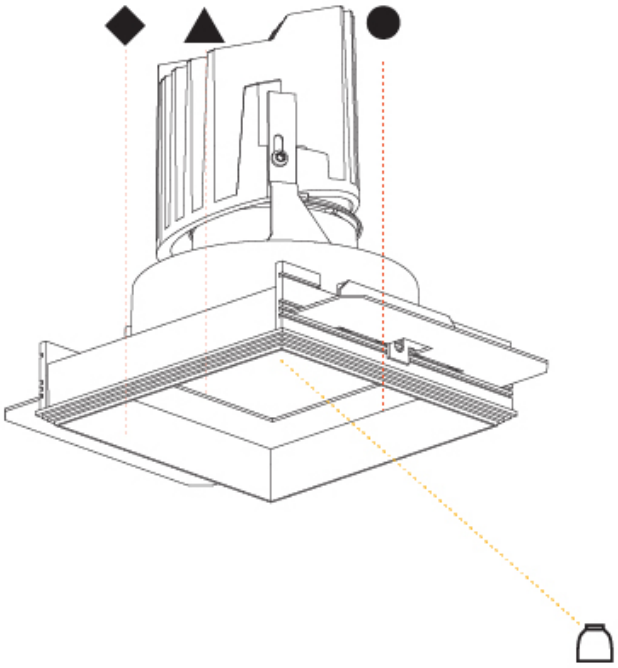

A

Zaneen Group Inc. © 2024, T 1800-388-3382, F 416-247-9319, www.zaneen.com

Available for International specifications by adding 'INT' at the end of the existing Model #. For assistance on 'custom' specifications, contact zteam@zaneen.com.
In a constant effort to supply the best product, we reserve the right to change specifications or materials without notice. The most recent specification sheets are found at zaneen.com

ZANEEN®

BIONIQ

COLOR FINISH CHART

PROJECT	
TYPE	
SPECIFIER	
QUANTITY	
DATE	

Fixture Finish

Sparkling Silver - 01 (SSR)

Black Velvet - 02 (BKV)

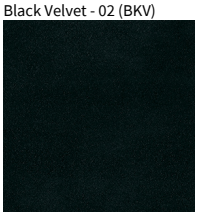

Crystal White - 03 (CWI)

Creamy - 04 (CRY)

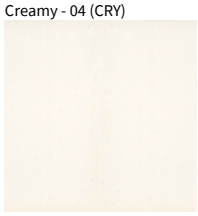

Hampton Bay - 05 (HAB)

Lagoon - 06 (LAG)

Urban Forest - 07 (UFT)

In the Army - 08 (ITA)

Rusty Angel - 09 (RUA)

Rusty Rush - 10 (RUR)

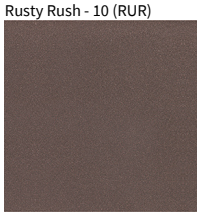

Milk and Chocolate - 11 (MIC)

Fade to Gray - 12 (FTG)

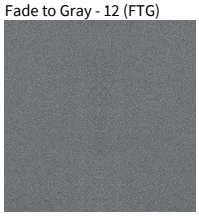

Mysterious Gray - 13 (MYG)

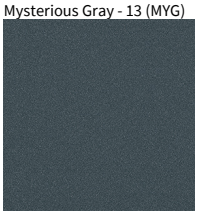

Twilight - 14 (TWT)

Lost Dream - 15 (LOD)

Purple Sky - 16 (PUS)

Fresh Oh - 17 (FRO)

Funky P. - 18 (FUP)

Kissing Aphrodite - 19 (KIA)

Poseidon's Paradise - 20 (POP)

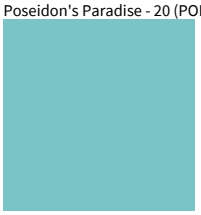

Blue Sky - 21 (BLS)

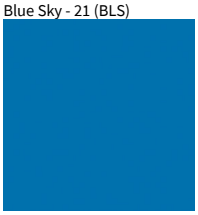

Spring Green - 22 (SPG)

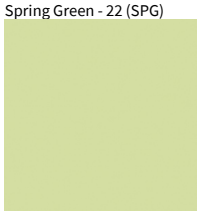

Mellow Yellow - 23 (MEY)

Golden Heart - 24 (GOH)

Gun Metal - 25 (GUM)

Champagne Cream - 26 (CHC)

Copper Mine - 27 (COM)

Ancient Bronze - 28 (ABZ)

Jazz Gold - 29 (JAG)

Olive Breeze - 30 (OBR)

Moonlight Silver - 31 (MOS)

Rosewood Red - 32 (ROR)

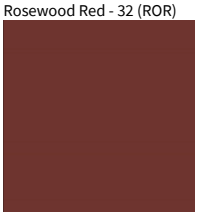

Digital: Not all screens are calibrated the same, and therefore, colors will appear differently betwee
Physical: When texture is involved, there will be variations in color, character and tone within a pro and between product families.

Gun Metal: No Gun Metal finish is alike. It combines a mixture of transparent and black color partic nsures a highly individual effect and no luminaire being identical.
Champagne Cream, Copper Mine, Ancient Bronze + Jazz Gold: These finishes have slight fading from specific powder coating production. Each luminaire will slightly vary.

Zaneen Group Inc. © 2024, T 1800 388 3382, T 416 247 9319, www.zaneen.com

Available for International specifications by adding 'INT' at the end of the existing Model #. For assistance on 'custom' specifications, contact zteam@zaneen.com.
In a constant effort to supply the best product, we reserve the right to change specifications or materials without notice. The most recent specification sheets are found at zaneen.com

June 3, 2024, 4:34 pm

ZANEEN®

BIONIQ

PROJECT	
TYPE	
SPECIFIER	
QUANTITY	
DATE	

LEGEND

	floor-mounted		pivotable		special LED (upon request) RGB, RGBW, tunable, gold+, meat+, art+, fashion+
	wall and ceiling: recessed and surface mounted		rotating		warm dim / natural dimming LED
	ceiling-mounted and wall-mounted		illuminate tilted		rechargeable battery powered
	wall-mounted		color of suspension cable		fixture with natural vivid LED (upon request)
	omni-directional light distribution		length of suspension cable	CRI	color rendering index
	direct light distribution		reflector degree selection	°K	color temperature
	direct/indirect light distribution		super spot	LM	lumen (luminous flux)
	indirect light distribution		lens	LM/W	efficacy (lumens per watt)
	asymmetric light distribution		lens pack	UGR	Unified Glare Rating (UGR) range from 5-40
	aura light distribution		shine ring	316	marine grade (AISI 316 stainless steel)
	round wall or ceiling cut-out		integrated shine ring with diffuser		walk on
	square wall or ceiling cut-out		free individual colors 01-29		drive on
	the supplied jig specifies the cutout dimensions		individual colors: 00 (free of charge), 01-25 (extra charge)	DSC	Dark Sky Compliance
M	minimum distance (meters) lamp - object		luminaire part to be colored (F1)		Americans with Disabilities Act (less than 4" off the wall located between 27"-84" from floor)
	recessed depth		luminaire part to be colored (F2)		lamp protected against explosion
	ceiling thickness in mm		luminaire part to be colored (F3)		blown glass using traditional methods by master glass blower
	ceiling thickness selection		luminaire part to be colored (F4)		acoustic material
	dimmable DP (phase), DV (0-10V), DD (dali), DS (step-dim)		luminaire part to be colored (F5)		protection class I, protection insulation
	included or excluded LED driver/transformer/ control gear		color of 3-circuit adaptor		protection class II, protection insulation
	separately switchable		indirect diffuser		ETL Certified to UL and CSA Standards
	sensor	D	direct diffuser		UL Certified to UL and CSA Standards
	remote control		ball-proof (upon request)		CSA Certified to UL and CSA Standards
	available upon request		accessory		Certified for North American Standards

IP RATING

IP20	protected against ingress of solid bodies greater than 12.5mm (finger)
IP33	protected against ingress of solid bodies greater than 2.5mm protected against sprays of water up to 60 degrees from the vertical (rain)
IP40	protected against ingress of solid bodies greater than 1mm (wire) no protection against the ingress of moisture
IP43	protected against ingress of solid bodies greater than 1mm (wire) protected against sprays of water up to 60 degrees from the vertical (rain)
IP44	protected against ingress of solid bodies greater than 1mm (wire) protected against water splashed from all directions
IP54	protected against limited ingress of dust (wet rooms/covered outdoor areas) protected against water splashed from all directions
IP65	protected against ingress of dust protected against jets of water
IP66	protected against ingress of dust protected against powerful jets of water or heavy seas
IP67	protected against ingress of dust protected against immersion of water between 15cm - 1m for 30 minutes
IP68	protected against ingress of dust protected against immersion of water under pressure for long periods

IK RATING

IK01	protected against 0.14 joules impact (equivalent to 0.25kg mass dropped from 56mm above the surface)
IK02	protected against 0.2 joules impact (equivalent to 0.25kg mass dropped from 80mm above the surface)
IK03	protected against 0.35 joules impact (equivalent to 0.25kg mass dropped from 140mm above the surface)
IK04	protected against 0.5 joules impact (equivalent to 0.25kg mass dropped from 200mm above the surface)
IK05	protected against 0.7 joules impact (equivalent to 0.25kg mass dropped from 280mm above the surface)
IK06	protected against 1 joules impact (equivalent to 0.25kg mass dropped from 400mm above the surface)
IK07	protected against 2 joules impact (equivalent to 0.5kg mass dropped from 400mm above the surface)
IK08	protected against 5 joules impact (equivalent to 1.7kg mass dropped from 300mm above the surface)
IK09	protected against 10 joules impact (equivalent to 5.0kg mass dropped from 200mm above the surface)
IK10	protected against 20 joules impact (equivalent to 5.0kg mass dropped from 400mm above the surface)